INSTRUCTION MANUAL

INSTALLATION INSTRUCTION

SPECIFICATIONS

Tank Cold Rolled Carbon Steel
Finish Triple Layer Electrostatic Paint
Water Chamber 100% butyl rubber, lined with polypropylene
Connection 304 Stainless steel
Air Valve Brass cap with o-ring seal
Maximum working pressure At Label
Maximum working temperature At Label
Tank Pre-charge At Label
Maximum Pre-charge 80 psi / 5.5 bar

HOW DOES PRESSURE TANK WORK?

Tank is engineered to optimize the performance of your system by increasing its draw-down thus saving your pump from excessive starts and stops. Tank protects and extends the life of your pump and will reduce your power consumption.

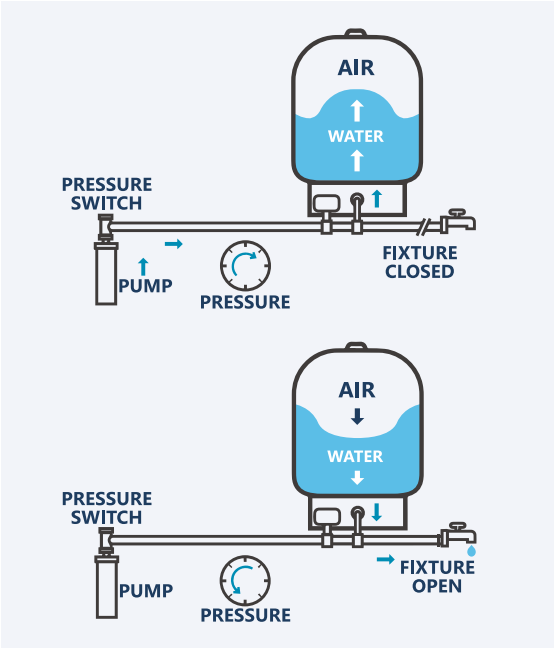

SYSTEM CONNECTION

In-line Models | 3, 8, 12, 18, 24 Liters

In-line models are conventionally installed directly in the main water supply line with a 1" connection.

IN-LINE MODELS

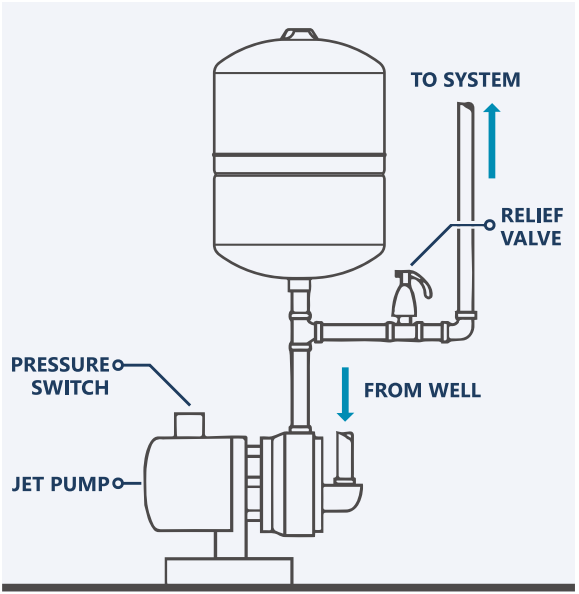

IN-LINE MODELS

Vertical Stand Models | 40, 60, 80, 100, 120, 130,160, 200, 240, 300, 450 Liters

The 40, 60, 80, 100, 120 Liters are equipped with plastic stand base and 1" connection. The 130, 160, 200, 240, 300, 450 Liters is equipped with 1-1/4" connector and iron support base.

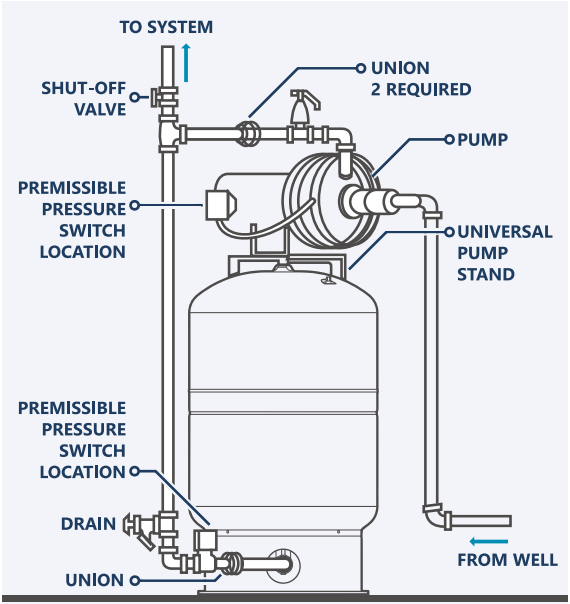

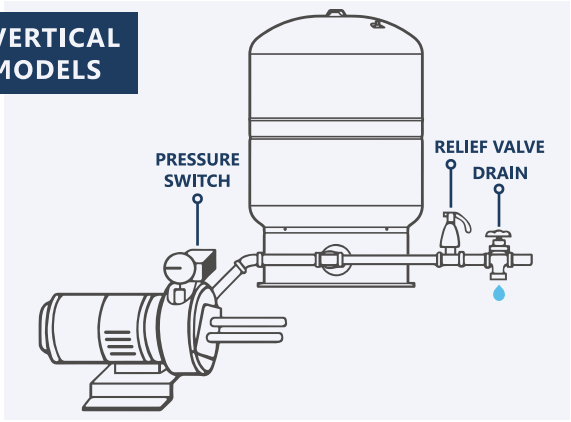

Horizontal Models 18, 24, 40, 60, 80, 100 Liters

Horizontal models are equipped with plastic pump stands and 1" connection.

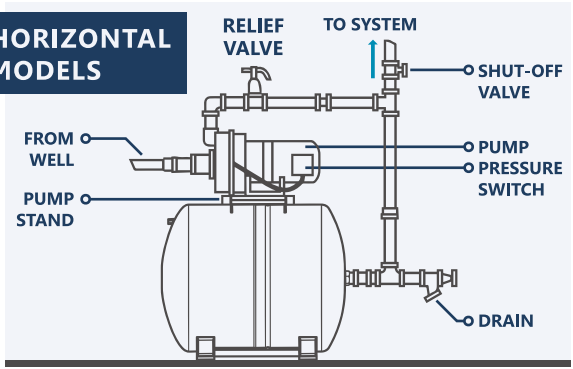

LOCATION

Proper Pressure Tank Location

The Pressure Tank should be installed as close as possible to the pressure switch. This will reduce the adverse effects of added friction loss and pressure switch bouncing, and the difference in elevation between Pressure Tank and switch.

DANGER!!!

EXPLOSION HAZARD. WHEN THE PRESSURE TANK HAS BEEN IN SERVICE AND A CHANGE TO A HIGHER PRE-CHARGE PRESSURE IS NECESSARY DUE TO A REQUIRED CHANGE IN THE PRESSURE SWITCH SETTING, FAILURE TO FOLLOW INSTRUCTIONS BELOW CAN CAUSE A RUPTURE OR EXPLOSION, POSSIBLY CAUSING SERIOUS OR FATAL PERSONAL INJURY, AND/OR PROPERTY DAMAGE.

DANGER!!!

① **DO NOT** ADJUST OR ADD PRESSURE IF THERE HAS BEEN A LOSS OF AIR.

② **DO NOT** ADJUST THE PRE-CHARGE PRESSURE IF THERE IS VISIBLE EXTERIOR CORROSION.

③ **DO NOT** ADJUST THE PRE-CHARGE PRESSURE IF THERE HAS BEEN A REDUCTION OF THE PUMP CYCLE TIME OR THE PRE-CHARGE PRESSURE COMPARED TO ITS INITIAL SETTING. THIS IS BECAUSE THE REDUCTION IN PUMP CYCLE TIME CAN RESULT FROM LOSS OF TANK AIR PRESSURE WHICH IN TURN CAN MEAN THERE MAY BE INTERNAL CORROSION AND ANY RE-PRESSURIZATION OR ADDITIONAL PRESSURE COULD RESULT IN RUPTURE OR EXPLOSION.

ADJUSTING

Adjusting Pre-charge Air Pressure. Prior to Installation

Step 1. Remove protective air valve cap

Step 2. Check pre-charge pressure which should be + or - 10% of the factory setting

Step 3. Release or add air as necessary to make the pre-charge pressure 2 psi below the pressure switch pump cut-in setting. (Example, if you have an 18Liter Tank with a pre-charge of 30 psi, and you have a pressure switch setting of 30/50 psi, adjust pre-charge of your 18 Liters from 30 psi to 28 psi.)

Step 4. Replace protective air valve cap.

EXPLOSION HAZARD

Failure to follow these instructions can cause a rupture or explosion possibly causing serious or fatal injury, flooding, and/or property damage.

SYSTEM CONNECTION

① Locate the Pressure Tank in the final desired location.

② Level as necessary.

③ To eliminate friction loss, do not reduce the pipe size from the pump to the Pressure Tank.

START UP

Fine Tuning Procedures.

Many times the actual pressure switch will vary from the standard pressure range indicated. These variations could cause a momentary lag of water delivery, as the pressure switch is not "tuned to the tank pre-charge pressure".

① Fill the system and Pressure Tank until pump cuts off.

② Open one or more fixtures to drain the Pressure Tank.

③ If there is a momentary pause in the water flow from the time the Pressure Tank is emptied and the pump starts, adjust pump cut-in setting clockwise slightly.

④ Close fixtures and refill Pressure Tank to pump cut off. Check time to fill.

⑤ Open fixtures and see if pause in water is eliminated. If not, continue adjusting pressure switch.

PERIODICALLY SAFETY INSPECTION

The Pumping Piping System and Pressure Tank require safety inspection every 6 months by a licensed professional.

CUSTOMER SELF-CHECK SHEET

DATE OF INSPECTION	PROFESSIONAL SIGN UP

Please keep this sheet carefully and provide with Warranty Claim!

PRODUCT WARRANTY

This warranty cannot be transferred - it is extended only to the original Purchaser or First User of the Product. By accepting and keeping this. Product you agree to all of the warranty terms and limitations of liability described below.

IMPORTANT WARNING - READ CAREFULLY THE INSTALLATION, OPERATING AND MAINTENANCE INSTRUCTIONS MANUAL

To avoid serious personal injury and/or property damage and to ensure safe use and proper care of this product. This water storage tank is designed for operation on cold well water systems limited to a maximum working pressure 150 PSI. A 125 PSI safety valve must be installed.

① **Who Receives Manufacture's Product Warranty?**
All purchasers or first users. The Warranty is non-transferable.

② **What is covered by this Warranty?**
The purchaser or first user of the new Product that at the time of manufacture, the Product is free from defects in material and workmanship. Any warranty claim must be made within the setting period unless another time period is set forth in the Manual, measured from the time the Product was purchased.

③ **What Manufacture Will Do If You Have a Covered Warranty Claim?**
In the event of a breach of the foregoing warranty, Manufacture will at its option replace or make repairs to correct any defect in material or workmanship or supply and ship either new or used replacement parts or products. Manufacture will not accept any claims for labor or other costs.

④ **What This Warranty Does Not Cover? - Exclusions and Limitations**
This Warranty does not cover any failure or problem unless it was caused by a defect in material or workmanship. In addition, this Warranty shall not apply:

- If the Product is not correctly installed, operated, repaired or maintained as described in the Manual provided with the Product; " to any failure or malfunction resulting from abuse (including freezing); improper or negligent: handling, shipping. Storage, operation, accident or alteration, lightning, flood, earthquake or any other environmental condition;
- To any failure or problem resulting from the use of the Product for any purpose other than those specified in the accompanying Manual or alteration of any part of the product;
- This Warranty does not cover labor costs, shipping charges, service charges and delivery expenses. Administrative fees or any costs incurred in removing or reinstalling the Product;
- This Warranty does not cover any claims submitted to Manufacture more than 30 days after expiration of the applicable warranty time period described in this Warranty

Additional Warranty Limitations

All implied warranties, including the implied warranties of merchantability and fitness for a particular purpose are specifically disclaimed.

Limitations of Remedies

The remedies contained in this warranty are the purchaser's or first user's exclusive remedies. In no circumstances will manufacture be liable for more than, and purchaser-first user's remedies shall not exceed the price paid for the product. In no case shall manufacture be liable for any special, indirect, incidental or consequential damages, whether resulting from non-delivery or from the use, misuse, or inability to use the product or from defects in the product or from manufacture's own negligence or other tort. This exclusion applies regardless of whether such damages are sought for breach of warranty, breach of contract, negligence, strict liability, in tort or under any other legal theory. Such damages include, but are not limited to inconvenience. loss or damage to property, mold, loss of profits, loss of savings or revenue, loss of use of the Products or any associated equipment facilities, buildings or services, downtime, and the claims of third parties including customers.

What To Do If You Have a Problem Covered By This Warranty

Any covered Warranty service must be authorized by Manufacture. Contact the person from whom you purchased the Product who must receive authorization from a Manufacture distributor. If you do not receive a prompt response, call Manufacture. Notice of a Warranty claim should be submitted by the authorized distributor.

MANUFACTURE LIMITED PRODUCT WARRANTY

WARNING

- Manufacture PRESSURE Tanks must be installed by a qualified professional following all local and national plumbing and electrical codes. Read and understand fully the instructions included here and those on the manufacturer's website which are updated on a regular basis. Failure to follow these instructions may result in serious injury or death and or property damage and will void the product warranty. This tank is intended for use on potable water systems only.
- This product's performance and life span can be significantly and adversely impacted by aggressive water conditions. A water test should be done at regular intervals looking for corrosive water, acids, and other contaminates which must be treated immediately if present. The system piping must be properly grounded to earth and a dielectric union is recommended in the installation.
- This tank is intended for use in potable water systems only and any other use may be dangerous and will void the warranty.
- The system piping must be properly grounded to earth and a dielectric union is recommended in the installation.

210330改圖

INSTRUCTION MANUAL